Board schematic

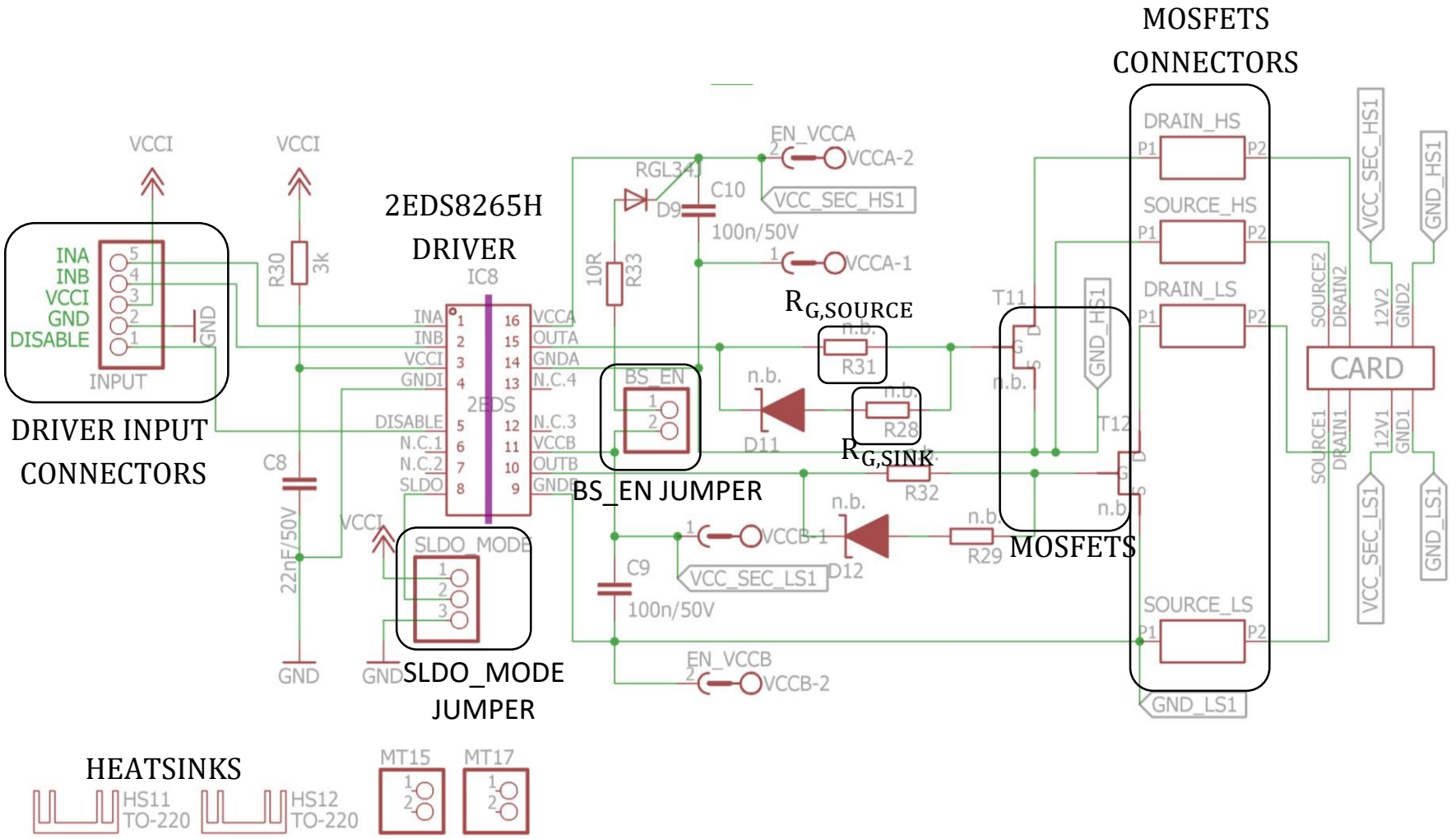

Copyright © Infineon Technologies AG 2018. All rights reserved.